WPP-531-F SPECIFICATIONS

HANDSFREE SPEAKERPHONE WITH KEYPAD IN A WEATHERPROOF HOUSING

Standard Analog Power, but also available in VoIP versions

Heavy duty stainless steel handsfree speakerphone in a cast aluminum black waterproof housing with TELEPHONE on door and pin latch for wall or pole mount. Designed with marine quality chrome tone dial keypad, push button for dial tone, and red/green LED light provides visual indication of call progress. Telephone can be programmed with call restrictions, ability to dial a PBX or access number, allow or block incoming calls, provide call time-out from 1-9 minutes or no time-out. Telephone can not be left off-hook, as it detects when called party hangs up and resets itself. Equipped with a weatherproof, puncture resistant speaker and microphone and tamper resistant security screws. ADA Emergency features Available. WPP models available in black, (-R) red, (-Y) Yellow, or (-G) Gray with TELEPHONE or EMERGENCY on door.

SPECIFICATIONS

Panel Size:	7 1/6"W x 11 1/4"H
Weatherproof Housing:	9 1/2"W x 12 5/8"H x 8"D (Including Door)
Weight:	Approximately 17 lbs.
Mounting Instructions:	Weatherproof Housing 4 holes spaced 8" x 5 7/8" Also available pole mounting bracket
Environment:	Temperature: -30°C (-22°F) to 60°C (140°F) Humidity: 0%-90% non-condensating
Programming:	Via DTMF Keypad
Input Power:	Telephone Line Powered
Loop Current:	30mA min to 80mA max
Impedance:	600 ohms
Type Jack:	RJ11C
Ringer Equivalency:	0.4A
UL & FCC Registration:	Certified
ACCESSORIES:	301-064 Security Tool **(required for installation)**

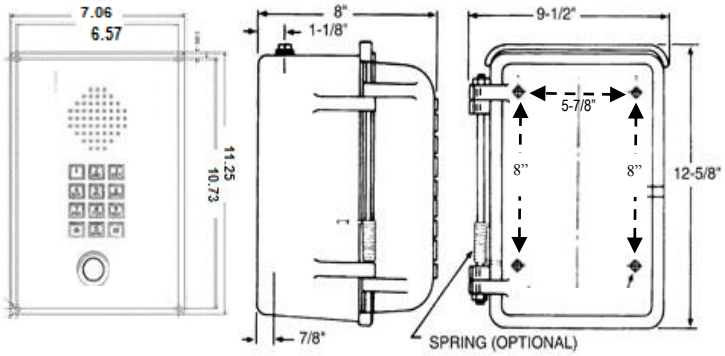

ADDITIONAL OPTIONS

IP - Voice over Internet Protocol Version available on all models (SIP)

Weatherproof Housing	-ST/-SB/-RST	-RIL	-SP	Pole Mount	Additional Options & Features
					Auto Answer (AA) Remote Programming (RP) Voice Announcement (VA)
Standard Black & TELEPHONE on Door -B-EMER Black & EMERGENCY on Door -R Red & EMERGENCY on Door -R-TEL Red & TELEPHONE on Door -Y Yellow & EMERGENCY on Door -Y-TEL Yellow & Telephone on Door -G Grey & TELEPHONE on Door -G-EMER Grey & EMERGENCY on Door	Blue Strobe Light option: • Steady on • Flashing • For location visibility • *Requires AC power*	Ring Indicator Light located on the phone panel for visual ring indication.	Spring loaded door option	Pole Mounting bracket fits poles 2.5" - 6".	

CEECO®

Providing Telecommunication Solutions Since 1930

Communication Equipment & Engineering Company
http://www.ceeco.net
Email: sales@ceeco.net

519 SW Park Street
Okeechobee, FL
Voice 863-357-0798
Fax 863-357-0006