SERVICE MANUAL

FOR

MODEL WPP-530-X

HANDSFREE RING-DOWN
WEATHERPROOF TELEPHONE

OR

MODEL HOB-530-X

OPEN ENCLOSURE HANDSFREE
RING-DOWN TELEPHONE

OR

MODEL SSP-510- X

HANDS FREE RING-DOWN
STAINLESS STEEL
PANEL TELEPHONE

EQUIPPED WITH
LOW-POWER SPEAKER BOARD

Serving the Telephone Industry Since 1930

Communication Equipment
& Engineering Company

1580 NW 65th Avenue
Plantation, FL 33313
Voice: 954-587-5430
Fax: 954-587-5440

IMPORTANT INFORMATION FOR CUSTOMER

Please fill in before you continue.

The following information is necessary when calling CEECO for assistance.

MODEL NUMBER	MODEL WPP-530-X, HOB-530-X, OR SSP-510-X, EQUIPPED WITH LOW-POWER SPEAKER BOARD
SERIAL NUMBER	
DATE MANUFACTURED	
LOCATION INSTALLED	

For us to better serve you, please have this information available when calling for technical support.

CEECO
Communication Equipment and Engineering Company

519 W. South Park Street
Okeechobee, FL 34972
863-357-0798 Voice
863-357-0006 Fax
info@ceeco.net
www.ceeco.net

TABLE OF CONTENTS

SECTION **PAGE**

1.0 INTRODUCTION 4

2.0 GENERAL 4

3.0 PROGRAMMING 5

4.0 TESTING/OPERATION 7

5.0 RECOMMENDED TOOLS AND TEST EQUIPMENT 7

6.0 INSTALLATION NOTES AND ASSEMBLY INSTRUCTIONS 8

7.0 SPECIFICATIONS 10

8.0 PARTS LIST: 11

9.0 FCC NOTICE 12

10.0 REPAIR AND RETURN INFORMATION 13

11.0 WARRANTY POLICY 14

1.0 INTRODUCTION

The practices in this manual provide installation and maintenance information for the CEECO Model WPP-530-X hands free weatherproof telephone, Model HOB-530-X weather resistant telephone, or the SSP-510-X hands free stainless steel panel telephone.

The information in this manual is subject to change without notification.

For information not included in this manual, please call or write:

CEECO
Customer Service
519 W. South Park Street
Okeechobee, FL 34972
863-357-0798 Voice
863-357-0006 Fax
info@ceeco.net
www.ceeco.net

2.0 GENERAL

2.1 The CEECO Model WPP-530-X, HOB-510-X, or SSP-510-X Hands Free Telephone is a sturdy, vandal resistant, stainless steel panel speakerphone. Instead of a hookswitch and handset, the WPP-530-X, HOB-530-X, or SSP-510-X has a Press to start/Press to stop button for the initiation and termination of phone calls. The telephone provides an "off hook" condition to the serving line, when the button is pushed. External "Ring-down" equipment or central office ring down service must be provided, in order for the telephone to initiate calls or automatically dial the numbers. Otherwise, the phone may only be used to receive incoming calls. Manual volume control is also provided inside the phone, by way of an adjustable "POT". This should only be attempted by a qualified technician.

2.2 Programming is accomplished via DTMF keypad.

3.0 PROGRAMMING

NOTE: **It is recommended that you ground yourself to prevent ESD damage to the PCB(s).**

3.1 The phone can be programmed to **automatically disconnect a phone call** after the elapse of a selected period of time **(1, 3 or 5 minutes)**. This is accomplished through the manipulation of mini-jumpers on the Printed Circuit Board.

3.2 Remove the telephone from the package and place it on a suitable protective surface so that the internal components may be accessed.

3.3 The Printed Circuit Board, has **two plastic mini-jumpers** on it. These mini-jumpers are used to program the Time Out Disconnect feature. Locate the plastic **mini-jumper** that has **"JP3"** written above it in small white print on the PC board. Below it, in small white print, appear the words **"ON"** and "OFF". Place the mini-jumper across the middle and far-left copper pins. This is the "ON" position, which activates the Time Out Disconnect feature. **When** the automatic call disconnect feature is **not desired**, the **jumper** should be in the **"OFF"** position (jumper bridges the middle and far right copper pins). Please refer to the diagram on the following page for assistance in locating the mini-jumpers.

3.3 When utilizing the Automatic Call Disconnect feature (Call Time-out), a choice of 1, 3, or 5 minutes is available. Locate the plastic **mini-jumper** on the Printed Circuit Board, which has above it **"JP2"** in small white print. Below it are "5", "3" and "1" also in small white print. Place the jumper so that it bridges the two copper pins corresponding with your selection of **1, 3, or 5 minutes**. Please refer to the diagram on the following page for assistance in locating the mini-jumpers.

3.4 **Programming** is now **complete** and the telephone is ready for testing/operation.

3.5 PROGRAMMING DIAGRAM

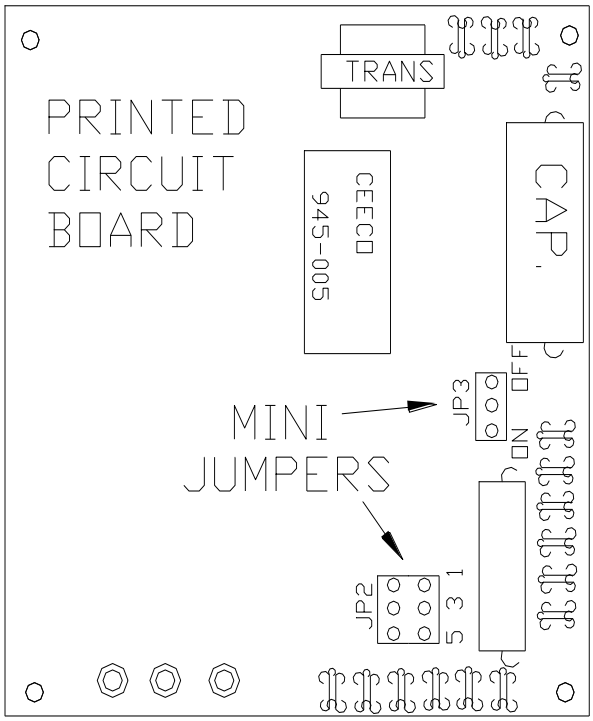

4.0 TESTING/OPERATION

Action: Connect the phone to the desired telephone line. Place a call to the telephone from another telephone.
Reaction: The telephone rings. Press the “CALL” button to answer the call. The red LED illuminates (if equipped). A normal speakerphone conversation is allowed.

Action: Finish the conversation and press the "CALL" button to hang up.
Reaction: The red LED goes out. (If equipped) and the call is terminated. If the phone is not hung up, it will automatically disconnect if it has been programmed it as such (refer to section 3.0).

Action: If the phone is mated with a ring-down circuit or other external call equipment, press the “CALL” button.
Reaction: Dial tone is received and the red LED illuminates (if equipped). External call equipment should provide desired operation.

Action: The called party answers.
Reaction: A normal speakerphone conversation is allowed.

Action: Finish the conversation and press the "CALL" button to hang up.
Reaction: The red LED goes out. (If equipped) and the call is terminated. If the phone is not hung up, it will automatically disconnect if it has been programmed it as such (refer to section 3.0).

5.0 RECOMMENDED TOOLS AND TEST EQUIPMENT

Security Tool, CEECO part number 301-064

Insulated Needle Nose Pliers

Flat Blade/Phillips Head Screwdriver

6.0 INSTALLATION NOTES AND ASSEMBLY INSTRUCTIONS

6.1 Using a 301-064 security tool (sold separately), loosen and remove the security screws.

6.2 The security tool is for a standard 5/32" button head screw generally used on the framework of the phone booths.

6.3 Separate the faceplate assembly from the weatherproof housing by pulling the faceplate forward.

6.4 Run the inside station wire into the enclosure and terminate on the RJ11C terminal block inside, as depicted on the following page. The CEECO provided terminal block (jack) **must** be used, as it contains required over-voltage protection circuitry.

6.5 The use of a gas tube station protector is recommended. The station ground should not exceed 50 ohms.

6.6 Plug the modular line cord from the faceplate assembly into the RJ11C terminal block.

6.7 Dress the telephone line cord and AC cable away from the security screws and seat the faceplate into the weatherproof housing.

6.8 Secure the cover assembly by tightening the security screws.

WARNING

A. Never install telephone wiring during a lightning storm.

B. Never install telephone jacks in wet locations unless the jack is specifically designed for wet locations.

C. Never touch uninsulated telephone wires or terminals, unless the telephone line has been disconnected at the network interface.

D. Use caution when installing or modifying telephone lines.

6.9 OVER-VOLTAGE PROTECTION DIAGRAM

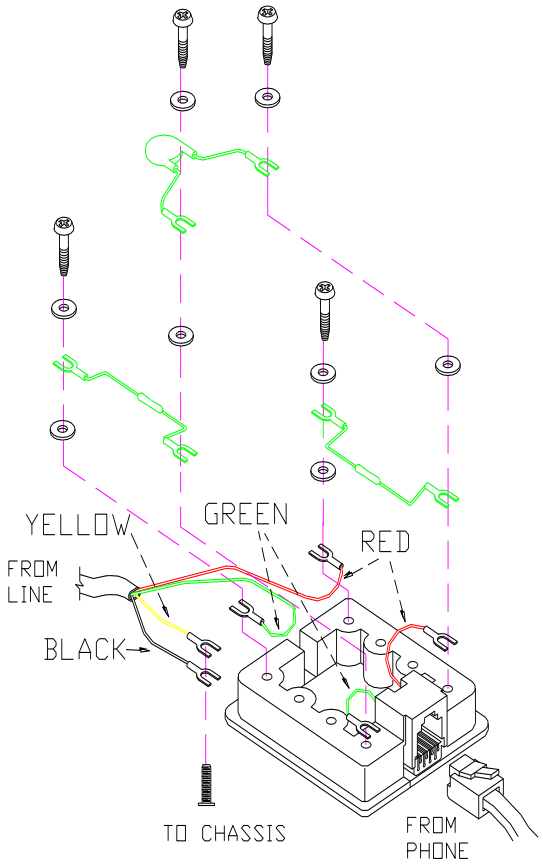

PROPRIETARY

CONFIDENTIAL

This drawing and all information contained therein is confidential and is the exclusive property of CEECO and may not be copied, reproduced or disclosed to anyone, in any manner whatsoever, or used for any purpose other than for which it is provided to you, without the prior written permission of CEECO.

7.0 SPECIFICATIONS

INPUT POWER:	C.O. Line powered
LOOP CURRENT:	28 mA minimum 80 mA maximum
IMPEDANCE:	600 ohms
SIGNALING:	Manual on-off hook
ENVIRONMENTAL:	Temperature 0o C to 50o C Humidity 20%-90% non-condensating
PROGRAMMING:	Via DTMF keypad.
TELEPHONE PANEL:	Brushed 14 gauge Stainless Steel
ENCLOSURE	WPP Model Cast Aluminum HOB Model Painted Steel
DIMENSIONS:	**WPP** Model – 12 5/8” High x 9 1/2” Wide x 8 ” Deep (including door) **HOB** Model – 11 1/4” High x 7 1/16 Wide x 5” Deep **SSP** Model - 11 1/4" High x 7 1/6" Wide x 4 1/4" Deep (Handset on hook)
MOUNTING:	WPP Model - 4 Holes spaced 8” x 5 7/8” HOB Model - 4 Holes spaced 8” x 5 7/8” SSP Model - 4 Holes spaced 10 3/4” x 6.5”
WEIGHT:	WPP Model - 17 lbs. HOB Model - 10 lbs. SSP Model - 5 lbs.
FCC REGISTRATION NO.:	BW-88T7-13716-TE-N
TYPE JACK:	RJ11C
UL LISTED NO.:	6OF5

8.0 PARTS LIST:

QUANTITY	PART NUMBER	DESCRIPTION
4	331-006	OUTER COVER SECURITY SCREW
1	301-018	MODULAR LINE CORD
1	531-11075	FACE PLATE
1	301-054	MODULAR CONNECTOR (RJ11C)
1	660-100	CEECO LP SPEAKERBOARD
1	14067	MICROPHONE.
1	6020	MOMENTARY PANEL SWITCH
1	14024	SPEAKER
1	331-005	WEATHERPROOF HOUSING (WPP)
1	331-010	STAINLESS STEEL PANEL.
1	401-009	RINGER
1	N/A	SERVICE MANUAL

9.0 FCC NOTICE

9.1 FCC REGISTRATION AND REPAIR INFORMATION

Your new telephone has been registered with the Federal Communication Commission (FCC) in accordance with Part 68 of its rules. The FCC requires that you be advised of certain requirements involving the use of this telephone.

9.2 CONNECTION AND USE WITH THE NATIONWIDE TELEPHONE NETWORK.

The FCC requires that you connect this telephone to the Nationwide Telephone Network through a registered jack provided by the Telephone Company in your area. This jack is a modular outlet, which you can order from your local telephone company.

9.3 NOTIFICATION TO THE TELEPHONE COMPANY

Before connecting this telephone, the FCC requires that you notify your local telephone company business office. The number is in the front of your phone book.

Tell them:

The "line" to which you will connect the telephone (that is, your phone number), the telephone's FCC registration number and ringer equivalence number. These numbers are listed in section 7.0

The FCC further requires that you notify your local telephone company when permanently disconnecting this telephone.

10.0 REPAIR AND RETURN INFORMATION

10.1 WARRANTY REPAIR

Any device returned requiring warranty service, repair or credit must be accompanied with a "Return Material Authorization" (RMA) FORM. It must include: return shipping instructions, original purchase order number and special marking instruction. A description of the trouble observed must be attached to the defective unit. This information must be inside the shipping container.

10.2 DIRECT ALL INQUIRES TO:

CEECO
Repair Department
519 W. South Park Street
Okeechobee, FL 34972
863-357-0798 Voice
863-357-0006 Fax
info@ceeco.net
www.ceeco.net

10.3 NON-WARRANTY REPAIR

CEECO will repair equipment out of warranty for a set charge plus parts. The customer must pay the shipping costs for both directions.

10.4 RETURN FOR CREDIT

Material may be returned for credit only with prior approval. Material authorized for return is subject to a 20% restocking charge based on the manufacturer's list price. Return Material Authorization must be requested no later than 30 days after original shipment.

11.0 WARRANTY POLICY

11.1 GENERAL

CEECO products are guaranteed to be free of defects in material and workmanship for a period of 365 days from the date of original purchase. CEECO's obligation under this warranty is limited to repair or replacement of any part found to be defective by CEECO. Under no circumstances shall CEECO be liable for loss, damage, cost of repair or consequential damages of any kind which have been caused by neglect, abuse, acts of GOD or improper operation of equipment.

11.2 PRINTED CIRCUIT BOARDS

Printed circuit boards should not be field repaired. If a unit is found to be faulty, replace it with another unit and return the faulty unit to CEECO for repair. Modifications by anyone other than CEECO will void the warranty.